INDIRECT GAS-FIRED AIR HEATER

HDG(H) SERIES

INDOOR/OUTDOOR INSTALLATION

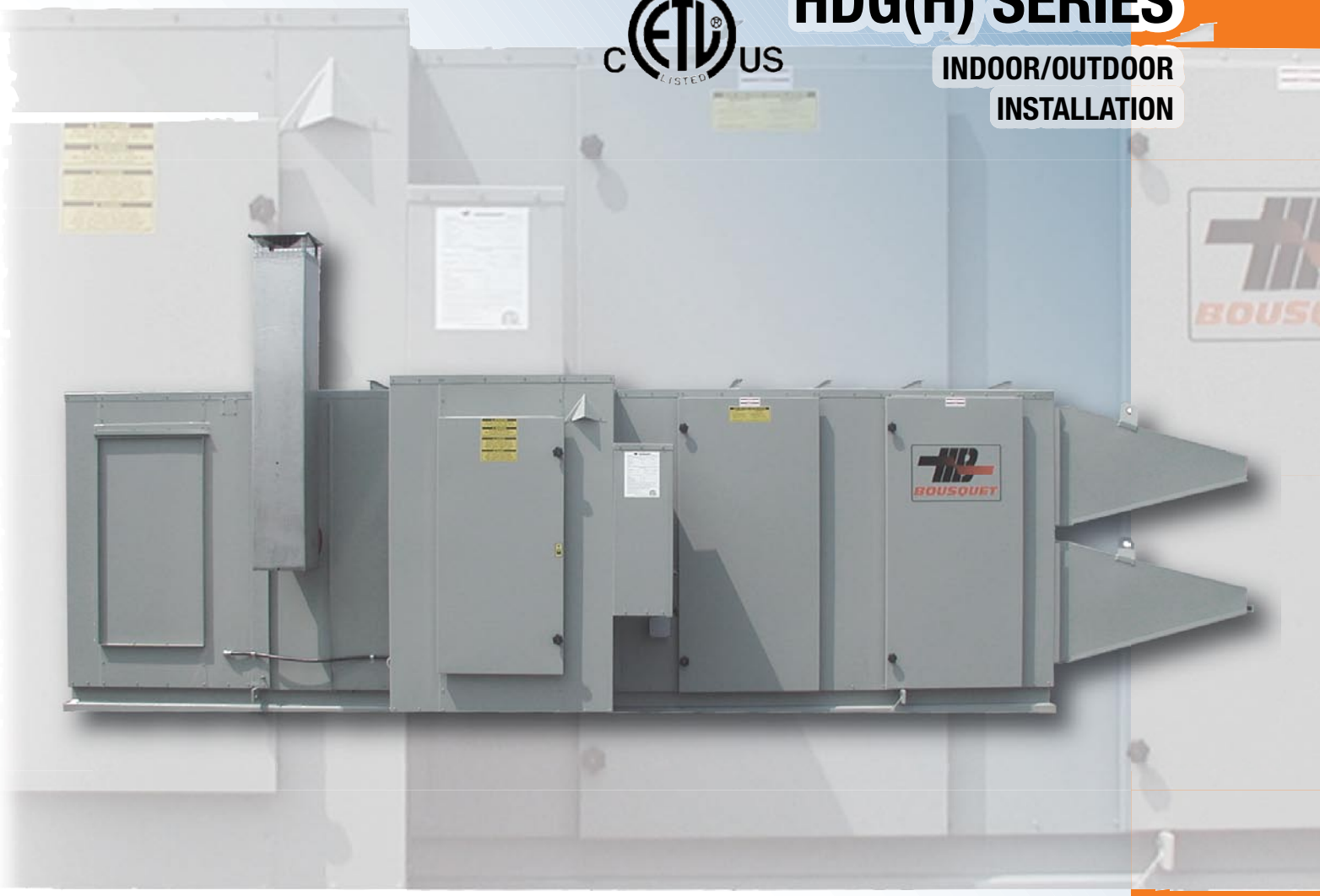

SPECIFICATIONS MANUAL

MANUFACTURED BY

BOUSQUET
Technologies

TABLE OF CONTENTS

Description....4

Applications....4

Selection criteria 5

Installation guidelines....6

Selection table....7

- Models HDG(H) 20 to 65.... 8
- Models HDG(H) 75 to 200....10
- Models HDG(H) 250 to 500....12

Dimensions

- Models HDG(H) 20 to 55....14
- Models HDG(H) 65 to 100....15
- Models HDG(H) 125 to 250....16
- Models HDG(H) 300 to 500....17

Roof curbs dimensions....18

Weight table....19

Options.... 20

Remote control panel (optional).... 21

Gas piping....22

Characteristics....23

Typical specifications....24

Warranty....27

The features, illustrations and description in this document were, to our knowledge, accurate at the time they were approved for printing. We reserve the right to change or stop offering some features as well as stop producing a given model without prior notice and commitment on our part.

BOUSQUET
Technologies

DESCRIPTION

The HDG(H) indirect gas-fired air heaters manufactured by **BOUSQUET** are certified for both indoor and outdoor installation and designed to serve as a heating system for make-up air or recirculated air. They operate with a minimum thermal efficiency of 80 % and use natural or propane gas. The capacities available range from 200 to 5000 MBH (from 59 to 1464 kW) and from 4000 to 90,000 SCFM (from 1888 to 42,475 l/s) of air at temperature differences of 50˚F to 120˚F (from 28˚C to 67˚C), which enables flexibility of use for multiple applications.

The multiple pass heat exchanger comprises a primary drum and secondary tubes made of series 304L stainless steel requiring no thermal treatment to prevent the cracking of welded joints. In addition, series 304L stainless steel is known for its great resistance to corrosion and high temperatures, which increases the service life of the unit. The exchanger is equipped with access panels for the inspection and cleaning of the tubes. It is installed as to enable the thermal expansion that occurs during the heating cycles of the unit. The forced combustion air and high gas modulation burner with a 20:1 turndown ratio offers optimal heat transfer on all the surfaces of the exchanger while maintaining optimal combustion efficiency through the entire range of capacity.

The heavy duty base frame of the unit is made of structural type U-shaped channels. The walls and roof are made of 18 gauges G90 galvanized steel panels with double folded longitudinal edges. The single wall units are insulated with a one-inch anti-bacterial "Fiber Glass Duct Liner with Reinforced Coating". The exchanger section is double wall insulated with two inches high temperature "Fiber Glass Blanket" 1.5lb/pi^3 density, and covered with a 22 gauge G90 galvanized steel liner. The weatherproof control cabinet has one large access door to allow for the maintenance of the gas piping and electrical components. The exterior surfaces of the unit are treated with a phosphate cleaner-conditioner and covered with a synthetic Chromating Phosphate with anticorrosive primer. The finish is ensured with first quality high performance alkyd resin enamel. When required, a fresh air intake cowl, a mixing box with filters, motorized damper, or downturn or upward discharge plenum may be incorporated into the HDG(H) unit. HDG(H) heaters are cETLus approved and are certified according to standards CAN/CGA3.2 and UL 795.

APPLICATIONS

- Fresh air compensation with or without recirculation
    - Apartment building corridors
    - Schools
    - Hospitals
    - Industries
- Industrial and commercial warm air heating systems
- Ventilation unit with cooling, re-circulation and/or economizer cycle

SELECTION CRITERIA

1. **Capacity**
   - Required CFM
   - External static pressure
   - Required temperature rise
   - Required final air temperature
   - Type of gas

2. **Type of installation**
   - Indoor
   - Outdoor

3. **Control location**
   - On the left-hand or right-hand side of the heater (when facing the airflow)

4. **Airflow configuration**
   - Direction of the airflow (vertical or horizontal)
   - 100% fresh air
   - 100% recirculated air
   - Modulation (recirculated/fresh air)

5. **Temperature control**
   - Electronic controller with integral temperature sensor
   - Electronic controller for a 0-10 VDC or 4-20 mA external signal

6. **Remote controls (optional)**
   - Basic or deluxe control panel
   - Room thermostat

7. **Other options**
   - Low limit temperature sensor
   - Air mixture temperature sensor
   - Lighting
   - Power outlets
   - Switches
   - Main power disconnect
   - Gas piping according to FM standard
   - Gas piping according to IRI standard

INSTALLATION GUIDELINES

The installer of a heater such as the HDG(H) must follow certain rules in order to comply with the codes governing gas equipment. Here are some recommendations:

- When gas pressure exceeds 1/2 psig (3.5kPa), a high pressure regulator must be supplied and installed by the contractor. This regulator must have the same modulation capability as the burner (20:1 turndown).
- Allow for sufficient clearance around the unit to enable its installation and maintenance.

For indoor installation,

- all purge and regulator vents must be individually piped to the exterior according to code **CGA-B149** or other codes in effect;
- the chimney must satisfy the following requirements:
    - have double walls
    - be certified for positive pressure units (type **PS**)
    - be certified **ULC/UL**;
- ensure that there is enough air for the combustion in the room where the heater is installed (refer to code in effect);
- ensure that the combustion air is clean and free of dust or corrosive material that could reduce the service life of the unit.
- For chimney and breeching dimensions, consult the manufacturer.

For any other information related to the installation of the HDG(H) air heaters, refer to the installation and service manual pertaining to these units.

SELECTION TABLE

Using the selection table below, choose the HDG(H) heater according to the required airflow and net heating capacity.

Model	Burner capacity[1]		Net capacity		Amperage[2] (A)	Airflow[3]	
HDG(H)	MBH	kW	MBH	kW	(575/3/60)	CFM	l/s
20[4]	250	73	200	59	1.6	1540-3710	727-1751
30[4]	375	109	300	88	1.6	2300-5560	1085-2624
35	438	128	350	102	1.6	2690-6480	1270-3058
40	500	146	400	117	1.6	3070-7410	1458-3497
50	625	183	500	146	1.6	3840-9260	1812-4370
55	688	201	550	161	1.6	4220-10190	1992-4809
65	813	238	650	190	1.6	4990-12040	2355-5682
75	938	275	750	220	1.6	5760-13890	2718-6555
85	1063	311	850	249	1.6	6530-15740	3082-7428
100	1250	366	1000	293	1.6	7680-18520	3625-9613
125	1563	458	1250	366	1.6	9600-23150	4531-10926
150	1875	549	1500	439	2.25	11520-27780	5437-13111
175	2188	641	1750	512	2.25	13440-32410	6343-15296
200	2500	732	2000	586	2.25	15360-37040	7249-17481
250	3125	915	2500	732	2.25	19200-46300	9061-21851
300	3750	1098	3000	878	2.25	23040-55560	11043-26221
350	4375	1281	3500	1025	2.62	26880-64820	12685-30592
400	5000	1464	4000	1171	3.12	30720-74080	14498-34926
500	6250	1830	5000	1464	3.12	38400-92600	18122-43702

Notes:
1. Corresponding to the burner and gas piping nominal capacity
2. Amperage required for the burner motor and controls (fan motor not included). For other voltage, consult the manufacturer.
3. For a temperature rise of 50˚F to 120˚F (28˚C to 67˚C) For less or more CFM, consult the manufacturer.
4. The HDG(H) 20 and 30 heaters are not certified $_{C}$ETL in Canada.

BOUSQUET
Technologies

MOTOR HORSEPOWER (HP)[1]											
Model	Δ T (°F)	Airflow CFM	Fan	External static pressure in inches of water[3]							
				0.25	0.5	0.75	1	1.25	1.5	1.75	2
HDG(H) 20	120	1540	9-9	0.44	0.51	0.59	0.68	0.77	0.87	0.97	1.09
	100	1860		0.54	0.64	0.74	0.84	0.95	1.06	1.18	1.3
	90	2060		0.7	0.81	0.93	1.04	1.16	1.28	1.4	1.53
	80	2320		0.86	1.09	1.22	1.35	1.48	1.61	1.74	1.88
	70	2450		1.01	1.26	1.39	1.53	1.66	1.8	1.94	2.08
	60	3090		***	2.33	2.49	2.66	2.83	3	3.17	3.34
	50	3710		***	3.87	4.06	4.25	4.45	4.65	4.85	5.06
HDG(H) 30	120	2300	12-12	0.57	0.70	0.84	0.99	***	***	***	***
	100	2780		0.67	0.81	0.96	1.11	1.26	1.41	***	***
	90	3090		0.89	1.04	1.2	1.36	1.53	1.7	1.87	2.05
	80	3480		1.22	1.39	1.51	1.75	1.94	2.12	2.31	2.5
	70	3970		1.75	1.94	2.14	2.35	2.55	2.76	2.97	3.19
	60	4630		2.69	2.91	3.15	3.38	3.62	3.86	4.1	4.34
	50	5560		***	4.81	5.08	5.35	5.63	5.92	6.2	6.49
HDG(H) 35	120	2690	12-12	0.73	0.86	1.01	1.17	1.33	1.5	***	***
	100	3250		0.94	1.1	1.27	1.44	1.61	1.79	1.97	2.15
	90	3600		1.25	1.42	1.6	1.79	1.98	2.17	2.36	2.56
	80	4050		1.73	1.92	2.12	2.33	2.54	2.75	2.96	3.18
	70	4630		2.51	2.73	2.95	3.18	3.42	3.65	3.90	4.14
	60	5400		***	4.14	4.39	4.66	4.92	5.2	5.47	5.75
	50	6480		***	***	7.19	7.5	7.82	8.14	8.46	8.78
HDG(H) 40	120	3070	15-11	0.78	0.93	1.09	1.26	1.43	1.61	1.8	***
	100	3710		1.03	1.2	1.38	1.56	1.75	1.96	2.13	2.33
	90	4120		1.35	1.55	1.75	1.95	2.15	2.36	2.57	2.78
	80	4630		2.07	2.09	2.31	2.53	2.76	2.98	3.22	3.45
	70	5290		2.79	2.97	3.22	3.47	3.72	3.98	4.24	4.5
	60	6180		***	4.53	4.82	5.11	5.4	5.7	5.99	6.29
	50	7410		***	***	7.85	8.19	8.54	8.89	9.24	9.59
HDG(H) 50	120	3840	15-15	0.98	1.17	1.39	1.63	***	***	***	***
	100	4630		1.3	1.52	1.75	1.98	2.22	2.47	2.72	2.99
	90	5150		1.74	1.98	2.23	2.49	2.75	3.01	3.28	3.56
	80	5790		2.39	2.66	2.93	3.22	3.51	3.8	4.1	4.4
	70	6620		3.49	3.79	4.1	4.41	4.74	5.07	5.4	5.73
	60	7720		***	5.75	6.11	6.47	6.84	7.22	7.6	7.98
	50	9260		***	9.57	9.98	10.4	10.83	11.26	11.7	12.15
HDG(H) 55	120	4220	15-15	1.19	1.34	1.56	1.8	2.05	2.32	***	***
	100	5100		1.59	1.82	2.06	2.31	2.57	2.83	3.01	3.37
	90	5660		2.11	2.36	2.62	2.9	3.18	3.46	3.75	4.04
	80	6370		2.94	3.21	3.5	3.8	4.11	4.43	4.75	5.07
	70	7280		4.31	4.61	4.92	5.26	5.6	5.96	6.31	6.67
	60	8490		***	7.06	7.41	7.79	8.17	8.57	8.98	9.39
	50	10190		***	***	12.17	12.59	13.03	13.49	13.95	14.43
HDG(H) 65	120	4990	(2) 12-12	1.34	1.56	1.84	2.14	2.48	***	***	***
	100	6020		1.58	1.86	2.16	2.48	2.80	3.16	3.52	3.88
	90	6690		2.22	2.54	2.88	3.22	3.56	3.88	4.32	4.72
	80	7530		2.9	3.24	3.6	3.96	4.34	4.74	5.14	5.56
	70	8600		4.20	4.60	5.00	5.40	5.82	6.26	6.70	7.14
	60	10030		6.48	6.94	7.42	7.88	8.36	8.84	9.34	9.84
	50	12040	*(2) 15-15*[2]	*4.46*	*4.73*	*5.01*	*5.29*	*5.57*	*5.86*	*6.14*	*6.43*

Notes: 1. Motor brake horsepower does not include the loss caused by pulley and belt friction (add 5%).
2. Fan with airfoil backward-inclined wheel
3. Internal static pressure includes the static pressure lost through the air intake, dampers, 2-inches filters (30%) and heat exchanger.

*** For other fan selections, consult the manufacturer.

BOUSQUET Technologies

MOTOR HORSEPOWER (kW)[1]											
Model	Δ T (°C)	Airflow l/s	Fan	External static pressure in Pa[3]							
				62	124	187	249	311	373	251	498
HDG(H) 20	67	727	9-9	0.33	0.38	0.44	0.50	0.57	0.65	0.72	0.81
	56	500		0.4	0.48	0.55	0.63	0.71	0.79	0.88	0.97
	50	972		0.52	0.6	0.69	0.78	0.87	0.95	1.04	1.14
	44	1095		0.64	0.81	0.91	1	1.1	1.2	1.3	1.4
	39	1156		0.75	0.94	1.04	1.14	1.24	1.34	1.45	1.55
	33	1458		***	1.74	1.86	1.98	2.11	2.24	2.36	2.49
	28	1751		***	2.89	3.03	3.17	3.32	3.47	3.62	3.77
HDG(H) 30	67	1085	12-12	0.43	0.52	0.63	0.74	***	***	***	***
	56	1312		0.5	0.6	0.72	0.83	0.94	1.05	***	***
	50	1458		0.66	0.78	0.89	1.01	1.14	1.27	1.39	1.53
	44	1642		0.91	1.04	1.13	1.3	1.45	1.58	1.72	1.86
	39	1874		1.3	1.45	1.6	1.75	1.9	2.06	2.21	2.4
	33	2185		2	2.17	2.35	2.52	2.7	3	3.06	3.24
	28	2624		***	3.59	3.79	4	4.2	4.41	4.62	4.49
HDG(H) 35	67	1270	12-12	0.54	0.64	0.75	0.87	0.99	1.12	***	***
	56	1534		0.7	0.82	0.95	1.07	1.2	1.33	1.47	1.6
	50	1699		0.93	1.06	1.19	1.33	1.48	1.62	1.76	1.91
	44	1911		1.29	1.43	1.58	1.74	1.89	2.05	2.21	2.37
	39	2185		1.87	2.04	2.2	2.37	2.55	2.72	2.91	3.09
	33	2549		***	3.09	3.27	3.47	3.67	3.88	4.08	4.29
	28	3058		***	***	5.36	5.59	5.83	6.07	6.31	6.55
HDG(H) 40	67	1458	15-11	0.58	0.69	0.82	0.94	1.06	1.2	1.34	***
	56	1751		0.77	0.89	1.03	1.16	1.3	1.46	1.59	1.74
	50	1944		1	1.16	1.3	1.45	1.6	1.76	1.92	2.07
	44	2185		1.54	1.56	1.72	1.89	2.06	2.22	2.4	2.57
	39	2497		2.08	2.21	2.4	2.59	2.77	2.97	3.16	3.36
	33	2917		***	3.38	3.59	3.81	4.03	4.25	4.47	4.69
	28	3497		***	***	5.85	6.11	6.37	6.63	6.89	7.15
HDG(H) 50	67	1812	15-15	0.73	0.87	1.03	1.22	***	***	***	***
	56	2185		0.97	1.13	1.3	1.48	1.66	1.84	2.03	2.23
	50	2431		1.3	1.48	1.66	1.86	2.05	2.24	2.45	2.65
	44	2733		1.78	1.98	2.18	2.4	2.62	2.83	3.06	3.28
	39	3124		2.6	2.83	3.06	3.29	3.53	3.78	4.03	4.27
	33	3643		***	4.29	4.56	4.82	5.1	5.38	5.67	5.95
	28	4370		***	7.14	7.44	7.76	8.08	8.4	8.72	9.06
HDG(H) 55	67	1992	15-15	0.89	1.00	1.16	1.34	1.53	1.73	***	***
	56	2407		1.19	1.36	1.54	1.72	1.92	2.11	2.24	2.51
	50	2671		1.57	1.76	1.95	2.16	2.37	2.58	2.8	3.01
	44	3006		2.19	2.39	2.61	2.83	3.06	3.3	3.54	3.78
	39	3436		3.21	3.44	3.67	3.92	4.18	4.44	4.71	4.97
	33	4007		***	5.26	5.53	5.81	6.09	6.39	6.7	7
	28	4809		***	***	9.08	9.39	9.72	10.06	10.4	10.76
HDG(H) 65	67	2355	(2) 12-12	1.00	1.16	1.37	1.60	1.85	***	***	***
	56	2841		1.18	1.39	1.61	1.85	2.09	2.36	2.62	2.89
	50	3157		1.66	1.89	2.15	2.4	2.65	2.89	3.22	3.52
	44	3554		2.16	2.42	2.68	2.95	3.24	3.53	3.83	4.15
	39	4059		3.13	3.43	3.73	4.03	4.34	4.67	5	5.32
	33	4734		4.83	5.16	5.53	5.88	6.23	6.59	6.69	7.34
	28	5682	*(2) 15-15*[2]	*3.33*	*3.53*	*3.74*	*3.94*	*4.15*	*4.37*	*4.58*	*4.79*

Notes: 1. Motor brake horsepower does not include the loss caused by pulley and belt friction (add 5%).
2. Fan with airfoil backward-inclined wheel
3. Internal static pressure includes the static pressure lost through the air intake, dampers, 2-inches filters (30%) and heat exchanger.

*** For other fan selections, consult the manufacturer.

BOUSQUET Technologies

MOTOR HORSEPOWER (HP)[1]											
Model	Δ T (°F)	Airflow CFM	Fan	External static pressure in inches of water[3]							
				0.25	0.5	0.75	1	1.25	1.5	1.75	2
HDG(H) 75	120	5760	(2) 12-12	1.64	1.92	2.22	2.54	2.88	3.22	3.6	***
	100	6950		2.22	2.54	2.88	3.22	3.56	3.94	4.32	4.72
	90	7720		2.96	3.32	3.68	4.04	4.42	4.82	5.22	5.64
	80	8680		4.1	4.5	4.9	5.32	5.72	6.16	6.6	7.04
	70	9920		5.96	6.42	6.88	7.36	7.82	8.2	8.78	9.28
	60	11580	**(2) 15-15**	**6.32**	**6.88**	**7.46**	*4.54*	*4.81*	*5*	*5.36*	*5.64*
	50	13890	*(2) 15-15[2]*	*6.29*	*6.6*	*6.91*	*7.22*	*7.54*	*7.9*	*8.18*	*8.51*
HDG(H) 85	120	6530	(2) 12-12	2.04	2.36	2.68	3.02	3.36	3.72	4.1	4.5
	100	7870		2.7	3.08	3.44	3.8	4.18	4.56	4.96	5.38
	90	8750		3.62	4.04	4.44	4.84	5.26	5.68	6.1	6.54
	80	9840		5.02	5.48	5.94	6.4	6.96	7.32	7.78	8.26
	70	11250	**(2) 15-15**	**4.7**	**5.18**	**5.68**	**6.2**	**6.76**	*4.15*	*4.41*	*4.68*
	60	13120		**7.26**	**7.8**	**8.38**	**8.96**	**9.56**	*5.9*	*6.19*	*6.50*
	50	15740	*(2) 15-15[2]*	*7.5*	*7.83*	*8.17*	*8.50*	*8.85*	*9.19*	*9.54*	*9.89*
HDG(H) 100	120	7680	(2) 15-11	2.28	2.62	2.98	3.36	3.74	4.14	4.54	4.96
	100	9260		3.06	3.46	3.88	4.3	4.72	5.14	5.6	6.04
	90	10290		4.08	4.52	4.98	5.44	5.9	6.38	6.86	7.34
	80	11580		5.66	6.18	6.68	7.2	7.72	8.24	8.76	9.3
	70	13230	**(2) 18-13**	**5.42**	**6**	**6.62**	**7.24**	**7.88**	**8.54**	**9.22**	**9.92**
	60	15440		**8.36**	**9.02**	**9.72**	*7.47*	*7.80*	*8.13*	*8.35*	*8.81*
	50	18520	*(2) 15-15[2]*	*11*	*11.4*	*11.75*	*12.13*	*12.51*	*12.9*	*13.3*	*13.68*
HDG(H) 125	120	9600	(2) 18-13	2.46	2.92	3.4	3.9	4.44	4.98	5.56	***
	100	11580		3.24	3.74	4.32	4.8	5.36	5.94	6.54	7.18
	90	12860		4.34	4.88	5.44	6.02	6.64	7.26	7.9	8.56
	80	14470		6.04	6.62	7.24	7.88	8.54	9.22	*4.95*	*5.28*
	70	16540	**(2) 18-18**	**7.3**	**8.06**	**8.82**	**9.62**	**10.4**	**11.22**	**12.06**	**12.92**
	60	19290		**11.26**	**12.14**	**13.02**	**13.92**	*8.56*	*8.95*	*9.4*	*9.75*
	50	23150	*(2) 18-18[2]*	*11.95*	*12.38*	*12.8*	*13.25*	*13.69*	*14.14*	*14.59*	*15.06*
HDG(H) 150	120	11520	(2) 18-18	2.98	3.54	4.1	4.7	5.34	6.0	6.66	7.36
	100	13890		3.94	4.58	5.22	5.88	6.56	7.26	7.98	8.72
	90	15440		5.24	5.94	6.66	7.38	8.12	8.86	9.64	10.44
	80	17360		7.26	8.04	8.84	9.64	10.44	11.28	12.12	12.98
	70	19840	**(2) 20-15**	**9.72**	**10.64**	**11.58**	**12.54**	**13.52**	**14.52**	**15.56**	**16.64**
	60	23150		**15.04**	**16.1**	**17.18**	**18.28**	**19.38**	**20.52**	**21.68**	**22.84**
	50	27780	*(2) 20-20[2]*	*12.12*	*12.64*	*13.16*	*13.68*	*14.21*	14.75	*15.29*	*16.23*
HDG(H) 175	120	13440	(2) 20-15	3.66	4.14	5.02	5.76	6.56	7.38	8.26	***
	100	16210		4.98	5.72	6.5	7.28	8.12	8.98	9.88	10.82
	90	18010		6.62	7.44	8.28	9.14	10.02	10.94	11.88	12.86
	80	20260		9.2	10.12	11.06	12	12.96	13.96	14.98	16.02
	70	23150		13.42	14.46	15.52	16.58	17.66	18.76	19.88	21.02
	60	27010	**(2) 20-20**	**16.86**	**18.24**	**19.66**	**21.1**	**22.56**	**24.06**	**25.58**	**27.12**
	50	32410	*(2) 20-20[2]*	**28.44**	*17.69*	*18.28*	*18.87*	*19.46*	*20.05*	*20.65*	*21.25*
HDG(H) 200	120	15360	(2) 20-15	4.64	5.36	6.1	6.88	7.7	8.56	9.44	10.38
	100	18520		6.54	7.38	8.22	9.08	9.96	10.88	11.82	12.78
	90	20580		8.72	9.66	10.58	11.52	12.48	13.46	14.48	15.5
	80	23150		12.16	13.2	14.24	15.30	16.36	17.44	18.54	19.66
	70	26460	**(2) 20-20**	**13.84**	**15.16**	**16.5**	**17.88**	**19.28**	**20.7**	**22.16**	**23.64**
	60	30870		**21.42**	**22.94**	**24.48**	**26.06**	**27.66**	**29.26**	*13.75*	*14.37*
	50	37040	*(2) 22-22[2]*	*17.23*	*17.92*	*18.61*	*19.3*	*20*	*20.17*	*21.41*	*22.12*

Notes: 1. Motor brake horsepower does not include the loss caused by pulley and belt friction (add 5%).
2. Fan with airfoil backward-inclined wheel
3. Internal static pressure includes the static pressure lost through the air intake, dampers, 2-inches filters (30%) and heat exchanger.

*** For other fan selections, consult the manufacturer.

BOUSQUET Technologies

MOTOR HORSEPOWER (kW)[1]											
Model	Δ T (°C)	Airflow l/s	Fan	External static pressure in Pa[3]							
				62	124	187	249	311	373	251	498
HDG(H) 75	67	2718	(2) 12-12	1.22	1.43	1.66	1.89	2.15	2.40	2.68	***
	56	3280		1.66	1.89	2.15	2.4	2.65	2.94	3.22	5.52
	50	3643		2.21	2.48	2.74	3.01	3.3	3.59	3.89	4.21
	44	4097		3.06	3.36	3.65	3.97	4.27	4.59	4.92	5.23
	39	4682		4.44	4.79	5.13	5.49	5.83	6.11	6.55	6.92
	33	5465	**(2) 15-15**	**4.77**	**5.13**	**5.56**	*3.39*	*3.59*	*3.73*	*4*	*4.21*
	28	6555	*(2) 15-15[2]*	*4.69*	*4.92*	*5.15*	*5.38*	*5.62*	*5.89*	*6.1*	*6.35*
HDG(H) 85	67	3082	(2) 12-12	1.52	1.76	2.0	2.25	2.51	2.77	3.05	3.56
	56	3714		2.01	2.3	2.57	2.83	3.12	3.4	3.7	4
	50	4130		2.7	3.01	3.31	3.61	3.92	4.24	4.55	4.88
	44	4644		3.74	4.09	4.43	4.77	5.19	5.46	5.8	6.16
	39	5309	**(2) 15-15**	**3.5**	**3.86**	**2.24**	**4.62**	**5.04**	*3.09*	*3.29*	*3.49*
	33	6192		**5.41**	**5.82**	**6.25**	**6.38**	**7.13**	*4.4*	*4.62*	*4.85*
	28	7428	*(2) 15-15[2]*	*5.59*	*5.84*	*6.09*	*6.34*	*6.6*	*6.85*	*7.11*	*7.37*
HDG(H) 100	67	3625	(2) 15-11	1.70	1.95	2.22	2.51	2.79	3.09	3.39	3.70
	56	4370		2.28	2.58	2.89	3.21	3.52	3.82	4.18	4.5
	50	4856		3.04	3.37	3.71	4.06	4.4	4.76	5.12	5.47
	44	5465		4.22	4.61	4.98	5.37	5.76	6.14	6.53	6.94
	39	6244	**(2) 18-13**	**4.04**	**4.47**	**4.94**	**5.4**	**5.88**	**6.37**	**6.88**	**7.4**
	33	7287		**6.23**	**6.73**	**7.25**	*5.57*	*5.82*	*6.06*	*6.23*	*6.57*
	28	9613	*(2) 15-15[2]*	*8.2*	*8.5*	*8.58*	*9.05*	*9.33*	*9.62*	*9.92*	*10.2*
HDG(H) 125	67	4531	(2) 18-13	1.83	2.18	2.54	2.90	3.31	3.71	4.15	***
	56	5465		2.42	3.79	3.22	3.58	4	4.43	4.88	5.35
	50	6069		3.24	3.64	4.06	4.49	4.95	5.41	5.89	6.38
	44	6829		4.5	4.94	5.4	5.88	6.37	6.88	*3.69*	*3.94*
	39	7806	**(2) 18-18**	**5.44**	**6.01**	**6.58**	**7.17**	**7.76**	**8.37**	**8.99**	**9.63**
	33	9104		**8.4**	**9.05**	**9.71**	**10.38**	*6.38*	*6.67*	*7.01*	*7.27*
	28	10926	*(2) 18-18[2]*	*8.91*	*9.23*	*9.54*	*9.88*	*10.21*	*10.54*	*10.88*	*11.23*
HDG(H) 150	67	5437	(2) 18-18	2.22	2.64	3.06	3.50	3.48	4.47	4.97	5.49
	56	6555		2.94	3.42	3.89	4.38	4.89	5.41	5.95	6.5
	50	7287		3.91	4.43	4.97	5.5	6.06	6.61	7.19	7.79
	44	8193		5.41	6	6.59	7.19	7.79	8.41	9.04	9.68
	39	9364	**(2) 20-15**	**7.25**	**7.93**	**8.64**	**9.35**	**10.08**	**10.83**	**11.6**	**12.41**
	33	10926		**11.22**	**12.01**	**12.81**	**13.63**	**14.45**	**15.3**	**16.17**	**17.03**
	28	13111	*(2) 20-20[2]*	*9.04*	*9.43*	*9.81*	*10.2*	*10.6*	*11*	*11.4*	*12.1*
HDG(H) 175	67	6343	(2) 20-15	2.73	3.09	3.74	4.30	4.89	5.50	6.16	***
	56	7650		3.71	4.27	4.85	5.43	6.06	6.7	7.37	8.07
	50	8500		4.94	5.55	7.17	6.82	7.47	8.16	8.86	9.59
	44	9562		6.86	7.55	8.25	8.95	9.66	10.41	11.17	11.95
	39	10926		10.01	10.78	11.57	12.36	13.17	13.99	14.82	15.67
	33	12747	**(2) 20-20**	**12.57**	**13.6**	**14.66**	**15.73**	**16.82**	**17.94**	**19.08**	**20.22**
	28	15296	*(2) 20-20[2]*	**21.21**	*13.19*	*13.63*	*14.07*	*14.51*	*14.95*	*15.4*	*15.85*
HDG(H) 200	67	7249	(2) 20-15	3.46	4.0	4.55	5.13	5.74	6.38	7.04	7.74
	56	8740		4.88	5.5	6.13	6.77	7.43	8.11	8.81	9.53
	50	9713		6.5	7.2	7.74	8.59	9.31	10.04	10.8	11.56
	44	10926		9.07	9.84	10.62	11.41	12.2	13.01	13.83	14.66
	39	12488	**(2) 20-20**	10.32	11.3	12.3	13.33	14.38	15.44	16.52	17.63
	33	14569		15.97	17.11	18.25	19.43	20.63	21.82	*10.25*	*10.72*
	28	17481	*(2) 22-22[2]*	*12.85*	*13.36*	*13.88*	*14.39*	*14.01*	*15.44*	*15.97*	*16.49*

Notes: 1. Motor brake horsepower does not include the loss caused by pulley and belt friction (add 5%).
2. Fan with airfoil backward-inclined wheel
3. Internal static pressure includes the static pressure lost through the air intake, dampers, 2-inches filters (30%) and heat exchanger.

*** For other fan selections, consult the manufacturer.

BOUSQUET
Technologies

MOTOR HORSEPOWER (HP)[1]											
Model	Δ T(°F)	Airflow CFM	Fan	External static pressure in inches of water[3]							
				0.25	0.5	0.75	1	1.25	1.5	1.75	2
HDG(H) 250	120	19200	(2) 20-20	5.76	6.74	7.76	8.82	9.92	11.06	12.22	13.44
	100	23150		7.98	9.08	10.24	11.42	12.62	13.88	15.14	16.46
	90	25720		10.64	11.84	13.1	14.38	15.70	17.07	18.42	19.82
	80	28940	**(2) 22-22**	14.82	16.16	17.56	18.96	20.42	21.9	23.4	24.92
	70	33070		**17.4**	**19.02**	**20.66**	**22.34**	**24.06**	**25.84**	**27.84**	**29.5**
	60	38580		**26.94**	**28.8**	**30.7**	**32.64**	**34.58**	**36.56**	*20.86*	*21.58*
	50	46300	*(2) 22-22[2]*	*28.05*	*28.89*	*29.72*	*30.56*	*31.39*	*32.23*	*33.06*	*33.89*
HDG(H) 300	120	23040	(2) 22-20	7.06	8.14	9.30	10.48	11.74	13.04	14.4	15.8
	100	27780		10.1	11.38	12.66	14	15.34	16.74	18.18	19.68
	90	30870		13.52	14.92	16.32	17.78	19.26	20.76	22.32	23.88
	80	34730	**(2) 25-25**	18.86	20.44	22.02	23.62	25.24	26.9	*12.04*	*12.8*
	70	39690		**20.56**	**22.48**	**24.42**	**26.4**	**28.04**	*15.37*	*16.16*	*16.96*
	60	46300		**31.78**	**34.04**	**36.3**	**38.56**	**40.84**	**43.16**	**45.52**	**47.88**
	50	55560	*(2) 25-25[2]*	*30.2*	*31.26*	*32.31*	*33.36*	*34.43*	*35.49*	*36.56*	*37.62*
HDG(H) 350	120	26880	(2) 25-20	8.36	9.66	10.96	12.28	13.66	15.06	16.52	18.02
	100	32410		11.96	13.48	15.02	16.56	18.14	19.72	21.32	22.96
	90	36010		16.04	17.74	19.44	21.16	22.86	24.6	26.36	28.14
	80	40510	**(2) 28-25**	22.28	24.18	26.08	28	29.94	31.86	33.82	35.76
	70	46300		**22.9**	**25.12**	**27.39**	**28.68**	**32.02**	**34.42**	**36.86**	*18.3*
	60	54020		**35.46**	**38.02**	**40.64**	**43.28**	**45.96**	*23.6*	*24.66*	*25.75*
	50	64820	*(2) 28-28[2]*	*31.10*	*32.3*	*33.52*	*34.74*	*35.98*	*37.23*	*38.47*	*39.74*
HDG(H) 400	120	30720	(2) 25-25	7.44	8.78	10.18	11.62	13.14	14.74	16.38	18.08
	100	37040		13.08	14.08	16.68	18.48	20.3	22.14	24.02	25.94
	90	41160		17.44	19.42	21.42	23.4	25.4	27.42	29.48	31.54
	80	46300	**(2) 28-28**	24.28	26.5	28.74	30.98	33.22	35.48	37.74	40.02
	70	52910		**27.56**	**30.16**	**32.8**	**35.44**	**38.12**	**40.82**	**43.56**	**46.32**
	60	61730		**42.66**	**45.68**	*26.26*	*27.4*	*28.56*	*29.73*	*30.9*	*32.09*
	50	74080	*(2) 28-28[2]*	*40.68*	*42.02*	*43.36*	*44.71*	*46.06*	*47.42*	*48.8*	*50.18*
HDG(H) 500	120	38400	(2) 28-28	11.48	13.38	15.34	17.32	19.36	21.42	23.58	25.78
	100	46300		15.96	18.18	20.46	22.78	25.10	27.46	29.86	32.30
	90	51440		21.32	23.78	26.28	28.82	31.38	33.96	36.58	39.24
	80	57870	**(2) 32-32**	29.64	32.36	35.16	37.98	40.84	43.74	46.64	*21.31*
	70	66140		**34.80**	**37.82**	**40.94**	**44.16**	**47.42**	**50.78**	**54.20**	*28.45*
	60	77160		**54.04**	**57.48**	**61.06**	**64.70**	*36.41*	*37.86*	*39.32*	*40.77*
	50	92600	*(2) 32-32[2]*	*52.04*	*53.74*	*55.44*	*57.15*	***	***	***	***

Notes: 1. Motor brake horsepower does not include the loss caused by pulley and belt friction (add 5%).
2. Fan with airfoil backward-inclined wheel
3. Internal static pressure includes the static pressure lost through the air intake, dampers, 2-inches filters (30%) and heat exchanger.

*** For other fan selections, consult the manufacturer.

MOTOR HORSEPOWER (kW)[1]											
Model	Δ T(°C)	Airflow l/s	Fan	External static pressure in Pa[3]							
				62	124	187	249	311	373	251	498
HDG(H) 250	67	9061	(2) 20-20	4.30	5.02	5.79	6.58	7.40	8.25	9.11	10.02
	56	10926		5.98	6.77	7.64	8.52	9.41	10.35	11.29	12.27
	50	12138		7.93	8.83	9.77	10.72	11.71	12.73	13.74	14.78
	44	13658	**(2) 22-22**	11.05	12.05	13.09	14.14	15.23	16.33	17.45	18.58
	39	15607		**12.98**	**14.18**	**15.41**	**16.66**	**17.94**	**19.27**	**20.76**	**22**
	33	18208		**20.09**	**21.48**	**22.89**	**24.34**	**25.77**	**27.26**	*15.56*	*16.09*
	28	21851	*(2) 22-22[2]*	*20.92*	*21.54*	*22.16*	*22.79*	*23.41*	*24.03*	*24.65*	*25.27*
HDG(H) 300	67	11043	(2) 22-20	5.26	6.07	6.94	7.81	8.75	9.72	10.74	11.78
	56	13111		7.53	8.49	9.44	10.44	11.44	12.48	13.56	14.68
	50	14569		10.08	11.13	12.17	13.26	14.36	15.48	16.64	17.81
	44	16391	**(2) 25-25**	14.06	15.24	16.42	17.61	18.82	20.06	*8.98*	*9.54*
	39	18732		**15.33**	**16.76**	**18.21**	**19.69**	**20.91**	*11.46*	*12.05*	*12.65*
	33	21851		**23.7**	**25.38**	**27.07**	**28.75**	**30.45**	**32.18**	**33.94**	**35.7**
	28	26221	*(2) 25-25[2]*	*22.52*	*23.32*	*24.09*	*24.88*	*25.67*	*26.46*	*27.26*	*28.05*
HDG(H) 350	67	12685	(2) 25-20	6.23	7.20	8.17	9.16	10.19	11.23	12.32	13.44
	56	15296		8.92	10.05	11.2	12.35	13.53	14.71	15.9	17.12
	50	16995		11.96	13.23	14.5	15.78	17.07	18.34	19.66	20.98
	44	19119	**(2) 28-25**	16.61	18.03	19.45	20.88	22.33	24.76	25.22	26.67
	39	21851		**17.08**	**18.73**	**20.42**	**21.39**	**23.88**	**25.67**	**27.48**	*13.65*
	33	25495		**26.44**	**28.35**	**30.31**	**32.27**	**34.27**	*17.6*	*18.39*	*19.2*
	28	30592	*(2) 28-28[2]*	*23.19*	*24.09*	*25*	*25.91*	*26.83*	*27.76*	*28.69*	*29.63*
HDG(H) 400	67	14498	(2) 25-25	5.55	6.55	7.59	8.67	9.80	10.99	12.21	13.48
	56	17481		9.75	10.5	12.44	13.78	15.14	16.51	17.91	19.34
	50	19425		13.01	14.48	15.97	17.45	18.94	20.45	21.98	23.52
	44	21851	**(2) 28-28**	18.11	19.76	21.43	23.1	24.77	26.46	28.14	29.84
	39	24971		**20.55**	**22.49**	**24.46**	**26.43**	**28.43**	**30.44**	**32.48**	**34.54**
	33	29133		**31.81**	**34.06**	*19.58*	*20.43*	*21.3*	*22.17*	*23.04*	*23.93*
	28	34926	*(2) 28-28[2]*	*30.34*	*31.33*	*32.33*	*33.34*	*34.35*	*35.36*	*36.39*	*37.42*
HDG(H) 500	67	18122	(2) 28-28	8.56	9.98	11.44	12.92	14.44	15.97	17.58	19.22
	56	21851		11.9	13.56	15.26	16.99	18.72	20.48	22.26	24.09
	50	24277		15.9	17.73	19.6	21.49	23.4	25.32	27.27	29.26
	44	27312	**(2) 32-32**	22.1	24.13	26.22	28.32	30.45	32.62	34.78	*15.89*
	39	31215		**25.95**	**28.2**	**30.53**	**32.93**	**32.93**	**35.36**	**37.87**	*21.22*
	33	36415		**40.3**	**42.86**	**45.53**	**48.25**	*27.15*	*28.23*	*29.32*	*30.4*
	28	43702	*(2) 32-32[2]*	*38.81*	*40.07*	*41.34*	*42.62*	***	***	***	***

Notes: 1. Motor brake horsepower does not include the loss caused by pulley and belt friction (add 5%).
2. Fan with airfoil backward-inclined wheel
3. Internal static pressure includes the static pressure lost through the air intake, dampers, 2-inches filters (30%) and heat exchanger.

*** For other fan selections, consult the manufacturer.

BOUSQUET Technologies

DIMENSIONS

Models HDG(H) 20, 30, 35, 40, 50 and 55

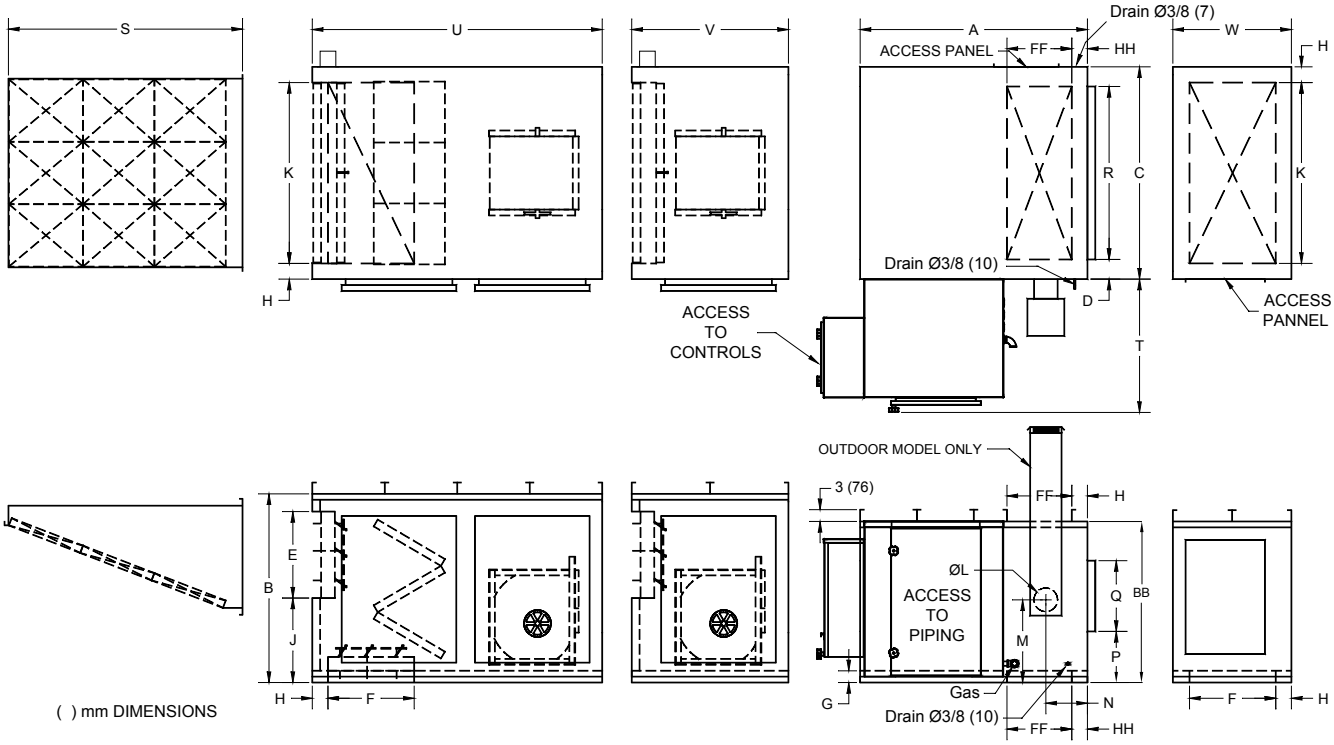

	HDG(H) 20 inches	HDG(H) 20 mm	HDG(H) 30 inches	HDG(H) 30 mm	HDG(H) 35 inches	HDG(H) 35 mm	HDG(H) 40 inches	HDG(H) 40 mm	HDG(H) 50 inches	HDG(H) 50 mm	HDG(H) 55 inches	HDG(H) 55 mm
Filters in air intake (4)	(2) 16x25 (2) 20x25	(2) 406x635 (2) 508x635	(2) 16x25 (2) 20x25	(2) 406x635 (2) 508x635	(2) 16x25 (2) 20x25	(2) 406x635 (2) 508x635	(6) 16x25	(6) 406x635	(6) 16x25	(6) 406x635	(6) 16x25	(6) 406x635
Filters in "V" filter section (4)	(2) 16x25 (2) 20x25	(2) 406x635 (2) 508x635	(2) 16x25 (2) 20x25	(2) 406x635 (2) 508x635	(2) 16x25 (2) 20x25	(2) 406x635 (2) 508x635	(6) 20x25	(6) 508x635	(6) 20x25	(6) 508x635	(6) 20x25	(6) 508x635
A	58	1473	58	1473	58	1473	58	1473	58	1473	58	1473
B	48	1219	48	1219	48	1219	48	1219	48	1219	48	1219
BB	41	1041	41	1041	41	1041	41	1041	41	1041	41	1041
C	40	1016	40	1016	40	1016	54	1372	54	1372	54	1372
D	5	127	5	127	5	127	5	127	5	127	5	127
E	22	559	22	559	22	559	22	559	22	559	22	559
F	22	559	22	559	22	559	22	559	22	559	22	559
FF	14	356	14	356	14	356	14	356	14	356	14	356
G	3	76	3	76	3	76	3	76	3	76	3	76
H	4	102	4	102	4	102	4	102	4	102	4	102
HH	4	102	4	102	4	102	5	127	5	127	5	127
J	21-1/2	546	21-1/2	546	21-1/2	546	21-1/2	546	21-1/2	546	21-1/2	546
K	32	813	32	813	32	813	46	1168	46	1168	46	1168
L	6	152	6	152	6	152	6	152	6	152	6	152
M	21	533	21	533	21	533	21	533	21	533	21	533
N	10-1/8	257	10-1/8	257	10-1/8	257	10-5/8	270	10-5/8	270	10-5/8	270
P	12	305	12	305	12	305	12	305	12	305	12	305
Q	18	457	18	457	18	457	18	457	18	457	18	457
R	30	762	30	762	30	762	44	1118	44	1118	44	1118
S	50-1/4	1276	50-1/4	1276	50-1/4	1276	50	1270	50	1270	50	1270
T	34	864	34	864	34	864	34	864	34	864	34	864
U	74	1880	74	1880	74	1880	74	1880	74	1880	74	1880
V	40	1016	40	1016	40	1016	45	1143	45	1143	45	1143
W	30	762	30	762	30	762	30	762	30	762	30	762
Ø GAS[1]	1	25	1	25	1	25	1	25	1	25	1	25
Ø VENT[2,3]	1/2	13	1/2	13	1/2	13	1/2	13	1/2	13	1/2	13
Ø PURGE[3]	1	25	1	25	1	25	1	25	1	25	1	25

1. With an inlet gas pressure of 14 inches water column (3.5kPa)
2. Indoor installation only
3. The purge (IRI option) and regulator vents must be piped separately to the outdoor.
4. Filter area is calculated for an air flow corresponding to a 70°F temperature rise (NOT 50°F).
5. The length and width of the curb are 1/2 inch smaller than those of the unit; the curb is 17 inches high.
6. The controls shown are on the left-hand side of the unit (controls on the right-hand side are also available).
7. For outdoor installation only.

BOUSQUET Technologies

DIMENSIONS

Models HDG(H) 65, 75, 85 and 100

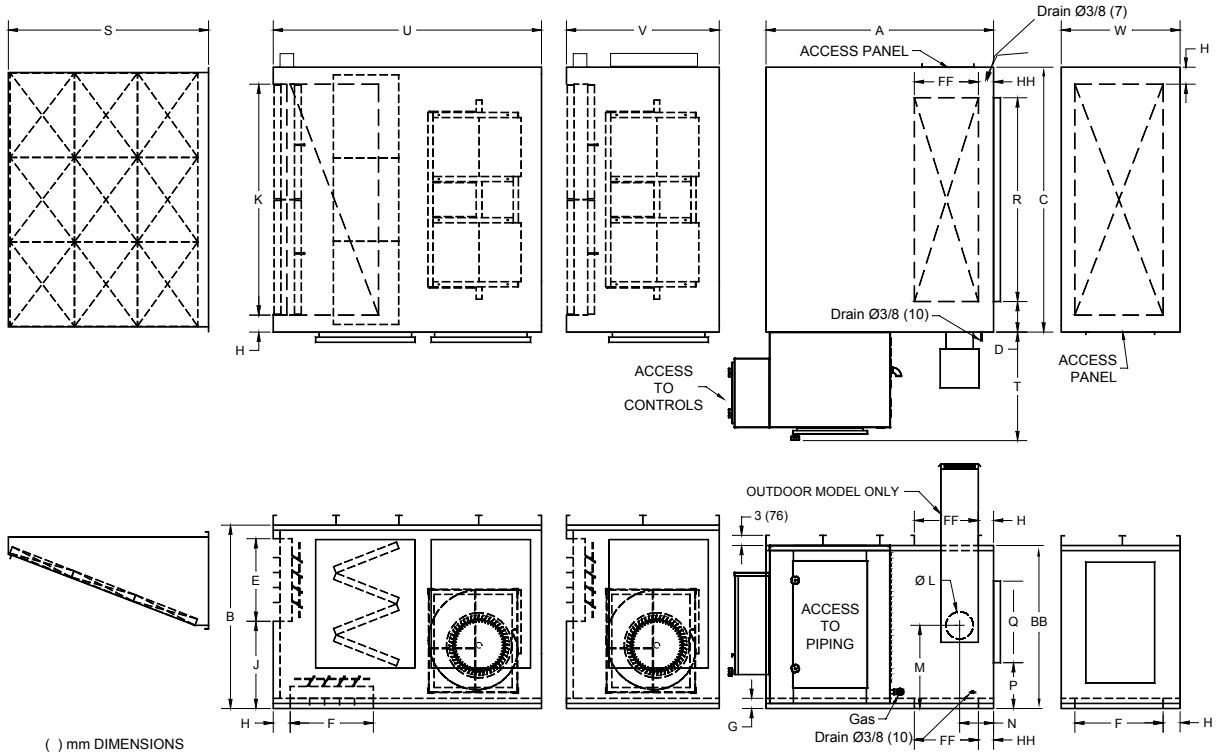

	HDG(H) 65		HDG(H) 75		HDG(H) 85		HDG(H) 100	
	inches	mm	inches	mm	inches	mm	inches	mm
Filters in air intake (4)	(6) 20x25 (3) 20x20	(6) 508x635 (3) 508x508	(6) 20x25 (3) 20x20	(6) 508x635 (3) 508x508	(3) 20x20 (6) 20x25	(6) 508x508 (6) 508x635	(3) 20x20 (6) 20x25	(6) 508x508 (6) 508x635
Filters in "V" filter section (4)	(6) 20x25 (3) 20x20	(6) 508x635 (3) 508x508	(6) 20x25 (3) 20x20	(6) 508x635 (3) 508x508	(12) 20x25	(12) 508x635	(12) 20x25	(12) 508x635
A	58	1473	58	1473	67	1702	67	1702
B	49	1245	49	1245	56	1422	56	1422
BB	42	1067	42	1067	50	1270	50	1270
C	74	1880	74	1880	78	1981	78	1981
D	7	178	7	178	9	229	9	229
E	22	559	22	559	26	660	26	660
F	22	559	22	559	26	660	26	660
FF	18	457	18	457	20	508	20	508
G	4	102	4	102	5	127	5	127
H	4	102	4	102	5	127	5	127
HH	5	127	5	127	5	127	5	127
J	22	559	22	559	21-1/2	546	21-1/2	546
K	66	1676	66	1676	68	1727	68	1727
L	8	203	8	203	8	203	8	203
M	22	559	22	559	26-1/2	673	26-1/2	673
N	9-3/4	248	9-3/4	248	10	254	10	254
P	13	330	13	330	14-1/2	368	14-1/2	368
Q	18	457	18	457	24	610	24	610
R	60	1524	60	1524	60	1524	60	1524
S	59-3/4	1518	59-3/4	1518	62-1/2	1518	62-1/2	1518
T	34	864	34	864	32	813	32	813
U	74	1880	74	1880	82	2083	82	2083
V	45	1143	45	1143	45	1143	45	1143
W	30	762	30	762	35	889	35	889
Ø GAS[1]	1	25	1	25	1-1/2	38	1-1/2	38
Ø VENT[2,3]	1/2	13	1/2	13	1/2	13	1/2	13
Ø PURGE[3]	1	25	1	25	1	25	1	25

1. With an inlet gas pressure of 14 inches of water column (3.5kPa)
2. Indoor installation only
3. The purge (IRI option) and regulator vents must be piped separately to the outdoor.
4. Filter area is calculated for an air flow corresponding to a 70°F temperature rise (NOT 50°F).
5. The length and width of the curb are 1/2 inch smaller than those of the unit; the curb is 17 inches high.
6. The controls shown are on the left-hand side of the unit (controls on the right-hand side are also available).
7. For outdoor installation only.

BOUSQUET Technologies

DIMENSIONS

Models HDG(H) 125, 150, 175, 200 and 250

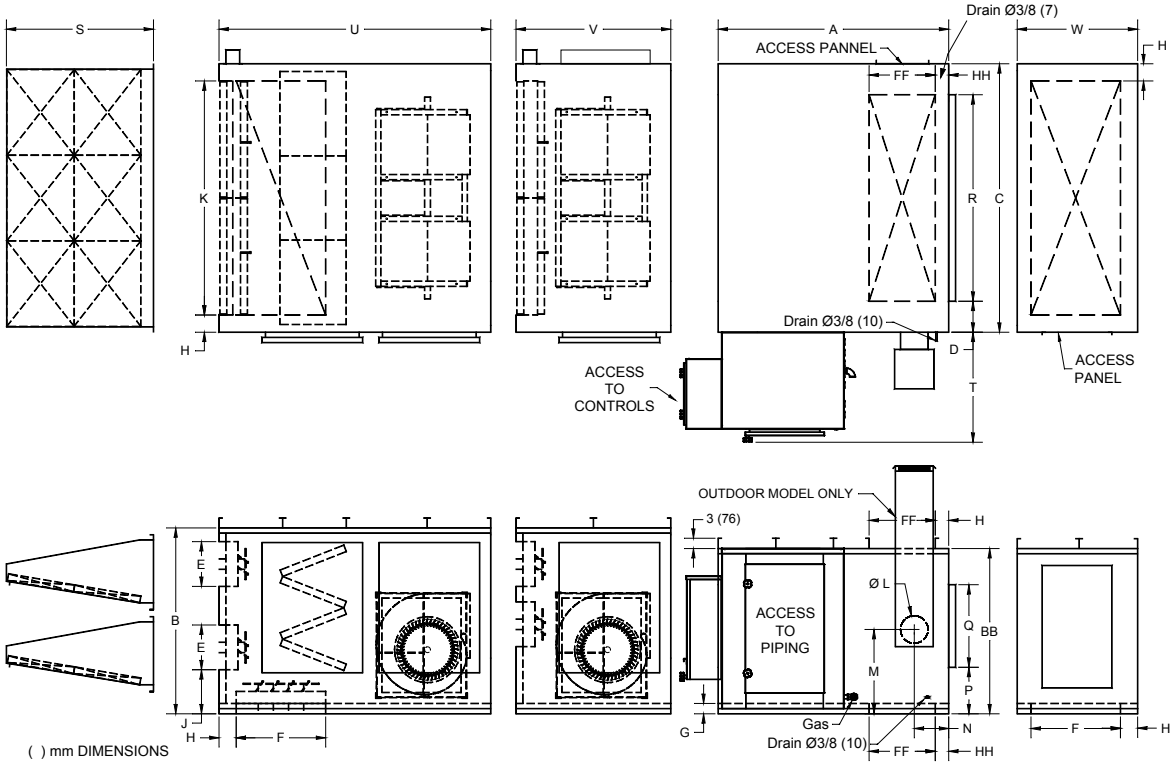

	HDG(H) 125 inches	HDG(H) 125 mm	HDG(H) 150 inches	HDG(H) 150 mm	HDG(H) 175 inches	HDG(H) 175 mm	HDG(H) 200 inches	HDG(H) 200 mm	HDG(H) 250 inches	HDG(H) 250 mm
Filters in air intake (4)	(6) 16x20 (18) 16x25	(6) 406x508 (18) 406x635	(6) 16x20 (18) 16x25	(6) 406x508 (18) 406x635	(6) 16x20 (18) 16x25	(6) 406x508 (18) 406x635	(32) 16x20 (8) 16x25	(32) 406x508 (8) 406x635	(32) 16x20 (8) 16x25	(32) 406x508 (8) 406x635
Filters in "V" filter section (4)	(15) 20x25 (5) 20x20	(15) 508x635 (5) 508x508	(15) 20x25 (5) 20x20	(15) 508x635 (5) 508x508	(15) 20x25 (5) 20x20	(15) 508x635 (5) 508x508	(32) 16x20 (8) 16x25	(32) 406x508 (8) 406x635	(32) 16x20 (8) 16x25	(32) 406x508 (8) 406x635
A	74	1880	74	1880	74	1880	77	1956	77	1956
B	63	1600	63	1600	63	1600	76	1930	76	1930
BB	63	1600	63	1600	63	1600	76	1930	76	1930
C	98	2489	98	2489	98	2489	108	2743	108	2743
D	8-1/2	216	8-1/2	216	8-1/2	216	6	152	6	152
E	18	457	18	457	18	457	23	584	23	584
F	36	914	36	914	36	914	46	1168	46	1168
FF	26	660	26	660	26	660	26	660	26	660
G	5	127	5	127	5	127	6	152	6	152
H	5	127	5	127	5	127	5	127	5	127
HH	5	127	5	127	5	127	5	127	5	127
J	13	330	13	330	13	330	16	406	16	406
K	88	2235	88	2235	88	2235	98	2489	98	2489
L	8	203	8	203	8	203	10	254	10	254
M	33	383	33	383	33	383	40	1016	40	1016
N	9-5/8	244	9-5/8	244	9-5/8	244	10-7/8	276	10-7/8	276
P	21	533	21	533	21	533	28	711	28	711
Q	24	610	24	610	24	610	24	610	24	610
R	81	2057	81	2057	81	2057	96	2438	96	2438
S	49	1245	49	1245	49	1245	64	1626	64	1626
T	32	813	32	813	32	813	36	914	36	914
U	94	2388	94	2388	94	2388	105	2667	105	2667
V	52	1321	52	1321	52	1321	55	1397	55	1397
W	45	1143	45	1143	45	1143	55	1397	55	1397
Ø GAS[1]	1-1/2	38	1-1/2	38	1-1/2	38	1-1/2	38	2	51
Ø VENT[2,3]	1/2	13	1/2	13	1/2	13	1/2	13	1/2	13
Ø PURGE[3]	1	25	1	25	1	25	1	25	1	25

1. With an inlet gas pressure of 14 inches of water column (3.5kPa)
2. Indoor installation only
3. The purge (IRI option) and regulator vents must be piped separately to the outdoor.
4. Filter area is calculated for an air flow corresponding to a 70°F temperature rise (NOT 50°F).
5. The length and width of the curb are 1/2 inch smaller than those of the unit; the curb is 17 inches high.
6. The controls shown are on the left-hand side of the unit (controls on the right-hand side are also available).
7. For outdoor installation only.

BOUSQUET Technologies

DIMENSIONS

Models HDG(H) 300, 350, 400 and 500

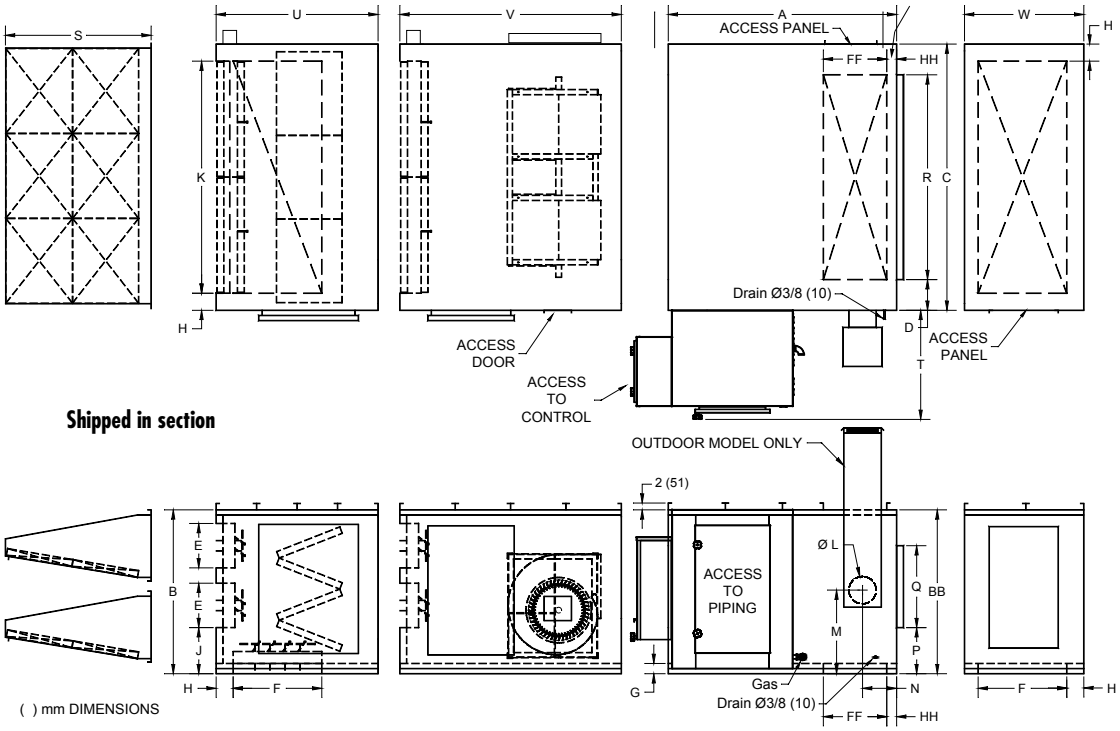

	HDG(H) 300 inches	HDG(H) 300 mm	HDG(H) 350 inches	HDG(H) 350 mm	HDG(H) 400 inches	HDG(H) 400 mm	HDG(H) 500 inches	HDG(H) 500 mm
Filters in air intake (4)	(30) 16x25 (6) 16x20	(30) 406x635 (6) 406x508	(30) 16x25 (6) 16x20	(30) 406x635 (6) 406x508	(28) 20x25 (14) 20x20	(28) 508x635 (14) 508x508	(28) 20x25 (14) 20x20	(28) 508x635 (14) 508x508
Filters in "V" filter section (4)	(30) 16x25 (6) 16x20	(30) 406x635 (6) 406x508	(30) 16x25 (6) 16x20	(30) 406x635 (6) 406x508	(35) 20x25 (7) 20x20	(35) 508x635 (7) 508x508	(35) 20x25 (7) 20x20	(35) 508x635 (7) 508x508
A	106	2692	106	2692	106	2692	106	2692
AA[4]	114	2896	114	2896	129	3277	129	3277
B	78	1981	78	1981	84	2134	90	2286
BB	78	1981	78	1981	84	2134	90	2286
C	150	3810	150	3810	150	3810	150	3810
D	9	229	9	229	9	229	9	229
E	23	584	23	584	32	813	32	813
F	46	1168	46	1168	64	1626	64	1626
FF	30	762	30	762	44	1118	44	1118
G	6	152	6	152	6	152	6	152
H	5	127	5	127	5	127	5	127
HH	5	127	5	127	5	127	5	127
J	23	584	23	584	17	432	17	432
K	140	3556	140	3556	140	3556	140	3556
L	10	254	10	254	12	308	12	308
M	41	1041	41	1041	44	1118	47	1194
N	12-1/8	308	12-1/8	308	11-1/8	283	11-1/8	283
P	29	737	29	737	32	813	35	889
Q	24	610	24	610	24	610	24	610
R	132	3353	132	3353	132	3353	132	3353
S	48	1219	48	1219	71	1803	71	1803
T	36	914	36	914	39	991	39	991
U	63	1600	63	1600	82	2083	82	2083
V	84	2134	84	2134	95	2413	95	2413
W	55	1397	55	1397	74	1880	74	1880
Ø GAS[1]	2	50	2	50	3	75	3	75
Ø VENT[2,3]	1/2	13	1/2	13	3/4	19	3/4	19
Ø PURGE[3]	1	25	1	25	1-1/2	38	1-1/2	38

1. With an inlet gas pressure of 14 inches of water column (3.5kPa)
2. Indoor installation only
3. The purge (IRI option) and regulator vents must be piped separately to the outdoor.
4. Lenght "AA" is for heaters with vertical discharge without turn plenum.
5. Filter area is calculated for an air flow corresponding to a 70°F temperature rise (NOT 50°F).
6. The length and width of the curb are 1/2 inch smaller than those of the unit; the curb is 17 inches high.
7. The controls shown are on the left-hand side of the unit (controls on the right-hand side are also available).
8. For outdoor installation only.

BOUSQUET
Technologies

ROOF CURB

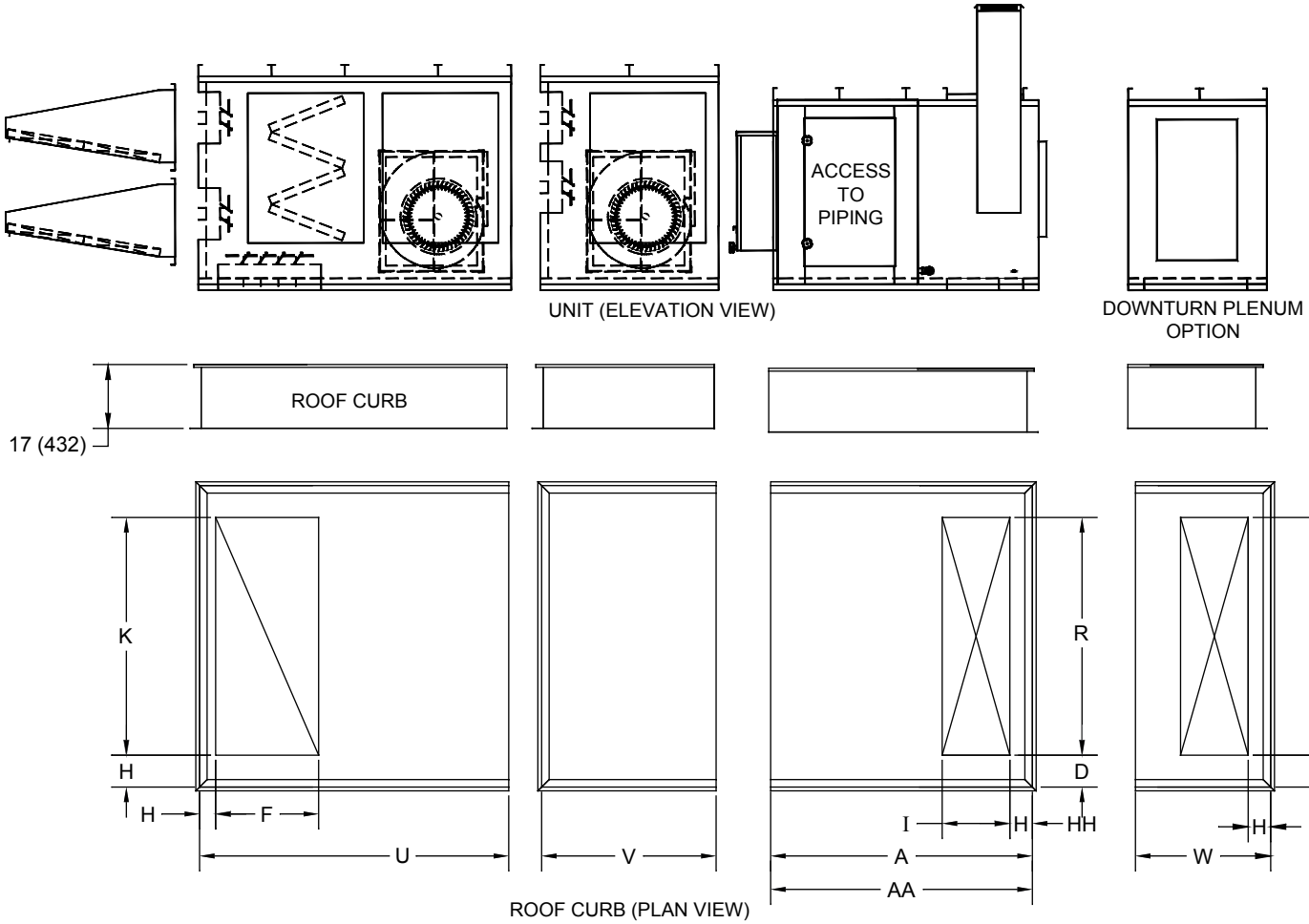

( ) mm DIMENSIONS

	HDG(H) 20, 30, 35		HDG(H) 40, 50, 55		HDG(H) 65, 75		HDG(H) 85, 100		HDG(H) 125, 150, 175		HDG(H) 200, 250		HDG(H) 300, 350		HDG(H) 400		HDG(H) 500	
	INCHES	MM	INCHES	MM	INCHES	MM	INCHES	MM	INCHES	MM	INCHES	MM	INCHES	MM	INCHES	MM	INCHES	MM
A	58	1473	58	1473	58	1473	67	1702	74	1880	77	1956	106	2692	106	2692	106	2692
AA	-	-	-	-	-	-	-	-	-	-	-	-	114	2896	129	3277	129	3277
C	39-1/2	1003	53-1/2	1359	73-1/2	1867	77-1/2	1969	97-1/2	2477	107-1/2	2731	149-1/2	3797	149-1/2	3797	149-1/2	3797
D	4-3/4	121	4-3/4	121	6-3/4	171	8-3/4	222	8-1/4	210	5-3/4	146	8-3/4	222	8-3/4	222	8-3/4	222
F	22	559	22	559	22	559	26	660	36	914	46	1168	46	1168	64	1626	64	1626
H	3-3/4	95	3-3/4	95	3-3/4	95	4-3/4	121	4-3/4	121	4-3/4	121	4-3/4	121	4-3/4	121	4-3/4	121
HH	3-3/4	95	4-3/4	121	4-3/4	121	4-3/4	121	4-3/4	121	4-3/4	121	4-3/4	121	4-3/4	121	4-3/4	121
I	14	356	14	356	18	457	20	508	26	660	26	660	30	762	44	1118	44	1118
K	32	813	46	1168	66	1676	68	1727	88	2235	98	2489	140	3556	140	3556	140	3556
R	30	762	44	1118	60	1524	60	1524	81	2057	96	2438	132	3353	132	3353	132	3353
U	73-3/4	1873	73-3/4	1873	73-3/4	1873	81-3/4	2076	93-3/4	2381	104-3/4	2661	62-3/4	1594	81-3/4	2076	81-3/4	2076
V	39-3/4	1010	44-3/4	1137	44-3/4	1137	44-3/4	1137	51-3/4	1314	54-3/4	1391	83-3/4	2127	94-3/4	2407	94-3/4	2407
W	29-3/4	756	29-3/4	756	29-3/4	756	34-3/4	883	44-3/4	1137	54-3/4	1391	54-3/4	1391	73-3/4	1873	73-3/4	1873

WEIGHT TABLE

MODEL	AIR INTAKE HOOD		FRESH AIR WITH RECIRCULATION[1]		100% FRESH AIR		EXCHANGER		PLENUM[2]	
	Lb	kg	Lb	kg	Lb	kg	Lb	kg	Lb	kg
HDG(H) 20	73	33	1443	641	1102	429	1469	666	427	194
HDG(H) 30	73	33	1413	641	1102	447	1469	666	427	194
HDG(H) 35	73	33	1413	641	1102	500	1469	666	427	194
HDG(H) 40	114	52	1805	819	1466	665	1746	792	526	239
HDG(H) 50	114	52	1805	819	1466	665	1746	792	526	239
HDG(H) 55	114	52	1805	819	1466	665	1746	792	526	239
HDG(H) 65	148	67	2113	958	1697	770	2194	995	665	302
HDG(H) 75	148	67	2113	958	1697	770	2194	995	665	302
HDG(H) 85	222	101	2651	1202	2100	953	2895	1315	863	391
HDG(H) 100	222	101	2651	1202	2100	953	2895	1315	863	391
HDG(H) 125	352	160	3873	1757	3086	1400	4136	1876	1387	629
HDG(H) 150	352	160	3873	1757	3086	1400	4136	1876	1387	629
HDG(H) 175	352	160	3873	1757	3086	1400	4136	1876	1387	629
HDG(H) 200	478	217	5181	2350	4121	1868	5093	2310	1908	865
HDG(H) 250	478	217	5181	2350	4121	1869	5093	2310	1908	865
HDG(H) 300	652	296	7921	3593	6292	2854	7453	3381	2486	1128
HDG(H) 350	652	296	7921	3593	6292	2854	7453	3381	2486	1128
HDG(H) 400	897	407	9882	4482	7660	3475	7583	3440	3066	1391
HDG(H) 500	897	407	9882	4482	7660	3475	8105	3676	3066	1391

Notes: 1. This weight includes the "V" filter section.
2. Optional discharge plenum is used to turn the air flow for either up, down or side discharge. Up and down discharge are also available without the turn plenum.

OPTIONS

Package with Dx Condensing Unit
(up to 100 tons)

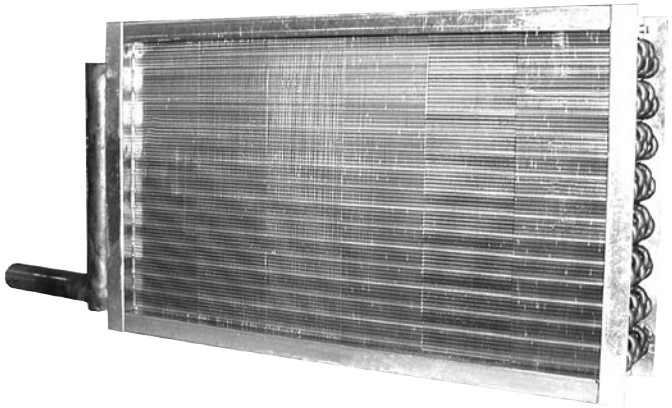

Cooling or Recovery Coils

Lighting fixture

Annunciator S7830A1005

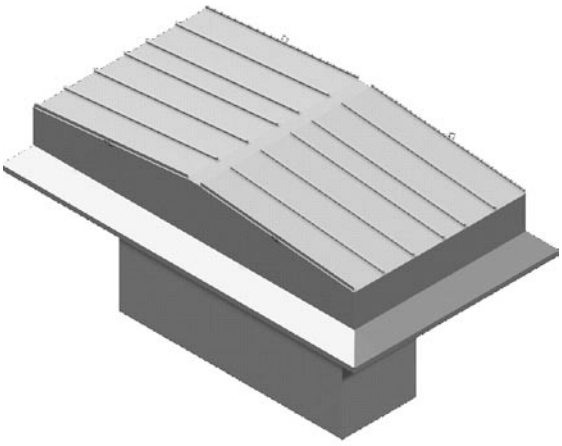

Mushroom air intake

Display 7800A1035

REMOTE CONTROL PANEL (optional)

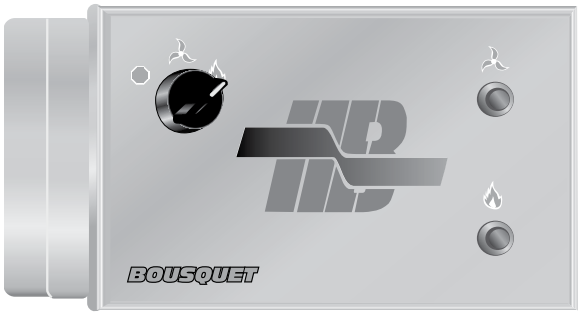

Basic panel

Basic Panel (10 1/2'' w x 5 1/2 '' h)

- Stop/fan/burner selector switch
- Fan operation light
- Burner operation light
- Connecting terminal block

Mid-Size Panel (10 1/2'' w x 10 1/2 '' h)

- Stop/fan/burner selector switch
- Fan operation light
- Burner operation light
- Connecting terminal block
- Temperature Selector (A350)

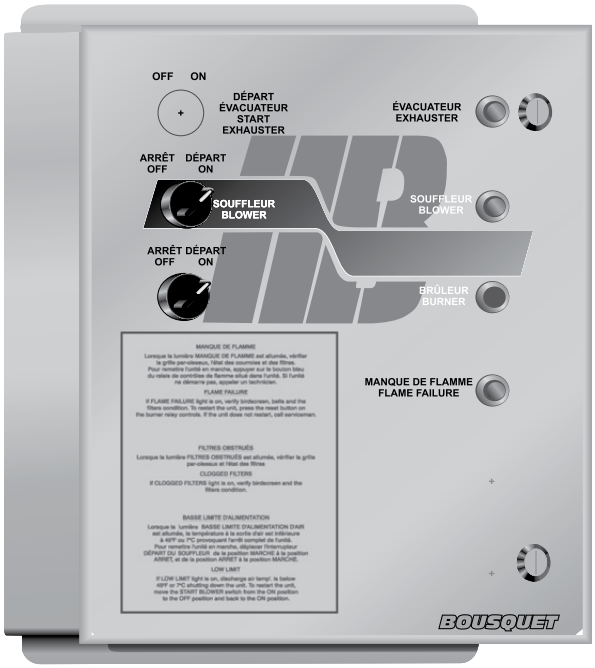

Deluxe panel

Deluxe Panel (14 3/8'' w x 17 1/2 '' h)

Standard equipment:

- Stop/start/fan selector switch
- Stop/start/burner selector switch
- Fan operation light
- Burner operation light
- Flame failure light
- Connecting terminal block

Optional equipment:

- Low limit alarm light
- Clogged filter light
- High gas pressure alarm light
- Low gas pressure alarm light
- Until purge cycle completed light
- Temperature selector (A350)
- Key lock

Note: Refer to the manufacturer for other arrangement or feature.

GAS PIPING

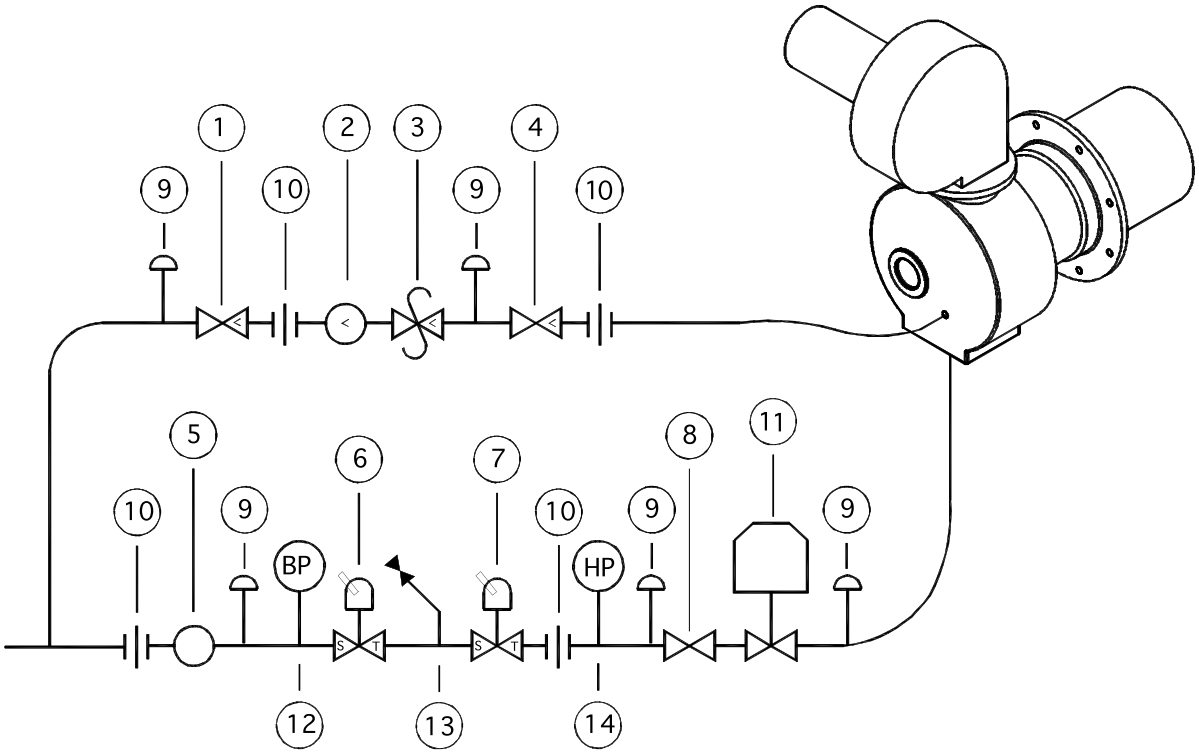

COMPONENTS	DESCRIPTIONS
	PILOT PIPING
1	Manual shut-off valve
2	Gas pressure regulator
3	Automatic shut-off valve
4	Manual ignition cock
	MAIN BURNER PIPING
5	Pressure regulator
6	Automatic quick-closing shut-off valve
7	Automatic slow-opening and quick-closing shut-off valve
8	Manual ignition cock
9	1/8-inch diameter test port
10	Piping union
11	Modulating valve supplied with burner
	OPTIONS
12	Low gas pressure switch (required for: FM, IRI and pressure in excess of 1/2 psig)
13	Normally open automatic vent valve (required for: IRI)
14	High gas pressure switch (required for: FM, IRI and pressure in excess of 1/2 psig)

CHARACTERISTICS

STANDARD CHARACTERISTICS:

- $_{C}$ETL$_{US}$ certified
- Natural gas
- GP Combustion forced draft burner
- Heat exchanger with 304L stainless steel drum and tubes
- Gas piping for inlet gas pressure of 14 inches of water column (3.5kPa)
- Main power supply (575 volts/3 phases/60 cycles)
- Single point connecting terminal block
- All the components required for the proper operation of the unit
- Flame rod detector
- Pre-purge period
- Galvanized steel (18 gauge) painted enamel 1-inch thick reinforced coated filler glass insulation
- Exchanger section: 2-inch thick (51 mm) high temperature insulating material with a density of 1.5lb/ft^3, with a 22 gauge galvanized steel liner
- Access doors with screw-on knob handles
- Lifting lugs on both sides of the unit for easy handling and installation
- Access panel to the exchanger tubes (for cleaning purposes)
- Drain
- Burner automatic valve interlock
- Supply air temperature controller

OPTIONAL CHARACTERISTICS:

- Electric power supply (208, 460 volts/3 phases/ 60 cycles)
- High gas pressure regulator (for pressure above 14 inches of water column)
- MAXON burner
- Propane gas
- Heat exchanger with 316L stainless steel drum and tubes
- Gas piping to FM or IRI requirement
- Ultra-violet flame detector
- Main power supply disconnect with or without fuses
- Terminal block to interface with a centralized building automation system
- Modulation controller with 0-10 VDC or 4-20 mA signal from a central building automation system
- Room thermostat
- Maintenance vestibule
- Maintenance platform
- Double wall construction (2", 3" or 4" thick)
- 120-volt electrical outlet
- Waterproof lighting fixture
- Space for coils
- Coils (cooling, heat recovery, ...)

Note: Refer to manufacturer for any other options.

TYPICAL SPECIFICATIONS

GENERAL

Supply and install a Bousquet model HDG(H)_____ indirect gas-fired heater operating on natural gas for indoor (outdoor) installation. The manufacturer must be accredited by the CWB in compliance with standard CSA W47.1. to meet the minimum standard applicable to all types of welds including the welds on a stainless steel heat exchanger.

PERFORMANCE

The heater will have the capacity to heat _____ CFM of standard air from _____˚F to _____˚F, for a net heat output of_____ MBH at a minimum combustion efficiency of 80%. The fuel used will be natural gas at an inlet pressure of _____ psig.

UNIT CONSTRUCTION

TThe heavy duty base frame of the unit shall be made of U-shaped channels. The walls and roof will be made of 18 gauges G90 galvanized steel panels with double folded longitudinal edges. PVC gaskets between each panel, with an external urethane based caulking shall be provided to ensure for unit water tightness. The single wall units will be insulated with a one-inch anti-bacterial "Fiber Glass Duct Liner with Reinforced Coating". The exchanger section is double wall insulated with two inches high temperature "Fiber Glass Blanket" 1.5lb/pi3 density, and covered with a 22 gauge G90 galvanized steel liner. The weatherproof control cabinet shall have one large access do0r to allow for the maintenance of the gas piping and electric components. The exterior surfaces of the unit shall be treated with a phosphate cleaner-conditioner and coated with a "Synthetic Chromating Phosphate" with anti corrosion agent. The finish shall be ensured by first quality high performance alkyd resin enamel.

For outdoor applications, all the controls and piping will be installed inside a weatherproof cabinet with access doors for easy maintenance.

HEAT EXCHANGER

The multiple pass heat exchanger shall be drum and tube type, with primary drum and secondary tubes entirely made of 304L stainless steel requiring no thermal treatment to prevent weld cracking and provide great resistance to corrosion and high temperatures, and increase service life of the unit. The exchanger will be equipped with bolted access panels for the inspection and cleaning of the tubes. 400 Series stainless steel, aluminized carbon steel heat exchangers are not acceptable.

BURNER AND GAS PIPING

The burner will be of a forced draft type, factory-installed on the exchanger with all gas piping and control wiring required for the proper operation of the unit.

The gas pilot piping will be equipped with an electronic spark ignitor, manual and automatic shut-off valves, pressure regulator, and manual cock. The gas piping of the burner will include a pressure regulator, automatic quick-closing shut-off valve, automatic slow-opening valve, manual ignition cock, test ports and modulating gas valve. The burner and gas piping assembly will have a modulating turndown ratio of at least 20:1.

Combustion air damper shall modulate with the gas control valve in order to maintain efficiency. Heaters with constant speed draft inducer are not acceptable.

FAN SECTION

The fan section will be designed according to the Air Movement and Control Association standards. The fan and motor will be installed on a steel structure welded in compliance with the Canadian Welding Bureau standards and rest on anti-vibration isolators. An access door will be installed to enable the maintenance of the fan, motor, bearings, belts and pulleys. The motor will be open drip proof (ODP), thermally protected with superior efficiency; it will be installed on a base to enable belt alignment and tension. The fan will be a forward-curved blade type (FC), double width, double inlet (DWDI).

FILTER AND DAMPER SECTION

Dampers will be of standard construction, galvanized steel blades equipped with electric actuators and limit switch. The filters will be disposable, 2-inch thick, 30% efficient. An access door will allow for the inspection and changing of the filters

BURNER CONTROL MODE (Select one of the following options):

- G1 for 100% outside air: Final air temperature is controlled by a 0-10 volts or 4-20 ma signal provided by other.
- G2 for 100% outside air: Final air temperature is controlled by a temperature controller and sensor supplied with the unit.
- G3 for Make-Up air and heating application, with recirculation: Final air temperature is controlled by two temperature controllers sensor and room thermostat supplied with the unit. One of the controllers will be ser for 70˚F supply air temperature; the other controller is ser for 130˚F supply air temperature; the room thermostat selects the 70˚F controller when room temperature is satisfied and the 130˚Fcontroller when heat is required.

AIR CONTROL MODE (Select one of the following options)

- V1: Damper actuators and signal are provided by others.
- V2-A for 100% outside air: ON/OFF damper actuator supplied with the unit.
- V2-B for outside and return air: Modulating dampers actuators supplied with theunit, but controlled by others.
- V2-C for outside and return air: Modulating damper actuators supplied with theunit and internally controlled with a minimum fresh air potentiometer.

REMOTE CONTROL PANEL

A remote control panel will be supplied by the manufacturer to turn the unit on from a remote location. It will be outfitted with a stop/fan/burner selection switch and light indicating the operating status of the unit.

CERTIFICATION

All HDG(H) heaters must be CETLUS approved and certified according to standards CAN/CGA3.2 and UL 795.

MSA-HDGH

Printed in Canada - Rev (06/2007)

MANUFACTURED BY
BOUSQUET
Technologies

2121, rue Nobel
Sainte-Julie (Québec) J3E 1Z9

Toll free: 1 800 363-9197
Tel : 514 874-9050
Fax : 450 649-8756
E-mail : bousquet@bousquet.ca
Web site : www.bousquet.ca